Base hidden behind your artwork.
Available in 2200K and 2700K.
Switch between 2200K and 2500K can be integrated on request.
Customise your product with the connection system, see accessories.

IP 20

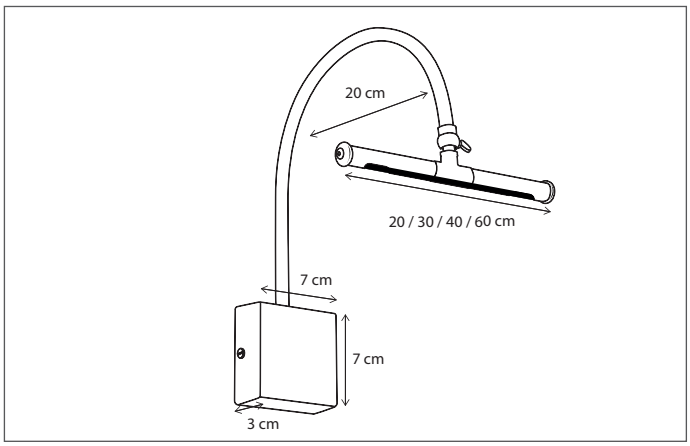

CODE	TYPE	FINISH	WATT	VOLT	FITTING
MAT022I20	Matisse invisible base 2200K - 20 cm	Bronze	1,4	230	-
MAT022I30	Matisse invisible base 2200K - 30 cm	Bronze	2,8	230	-
MAT022I40	Matisse invisible base 2200K - 40 cm	Bronze	4,2	230	-
MAT022I60	Matisse invisible base 2200K - 60 cm	Bronze	7	230	-
MAT027I20	Matisse invisible base 2700K - 20 cm	Bronze	1,4	230	-
MAT027I30	Matisse invisible base 2700K - 30 cm	Bronze	2,8	230	-
MAT027I40	Matisse invisible base 2700K - 40 cm	Bronze	4,2	230	-
MAT027I60	Matisse invisible base 2700K - 60 cm	Bronze	7	230	-
MAT122I20	Matisse invisible base 2200K - 20 cm	Brushed nickel	1,4	230	-
MAT122I30	Matisse invisible base 2200K - 30 cm	Brushed nickel	2,8	230	-
MAT122I40	Matisse invisible base 2200K - 40 cm	Brushed nickel	4,2	230	-
MAT122I60	Matisse invisible base 2200K - 60 cm	Brushed nickel	7	230	-
MAT127I20	Matisse invisible base 2700K - 20 cm	Brushed nickel	1,4	230	-
MAT127I30	Matisse invisible base 2700K - 30 cm	Brushed nickel	2,8	230	-
MAT127I40	Matisse invisible base 2700K - 40 cm	Brushed nickel	4,2	230	-
MAT127I60	Matisse invisible base 2700K - 60 cm	Brushed nickel	7	230	-
MAT222I20	Matisse invisible base 2200K - 20 cm	Chrome	1,4	230	-
MAT222I30	Matisse invisible base 2200K - 30 cm	Chrome	2,8	230	-
MAT222I40	Matisse invisible base 2200K - 40 cm	Chrome	4,2	230	-
MAT222I60	Matisse invisible base 2200K - 60 cm	Chrome	7	230	-
MAT227I20	Matisse invisible base 2700K - 20 cm	Chrome	1,4	230	-

Contact us for:

Customisation, connectivity or halogen version of the collection

CODE	TYPE	FINISH	WATT	VOLT	FITTING
MAT227I30	Matisse invisible base 2700K - 30 cm	Chrome	2,8	230	-
MAT227I40	Matisse invisible base 2700K - 40 cm	Chrome	4,2	230	-
MAT227I60	Matisse invisible base 2700K - 60 cm	Chrome	7	230	-
MAT322I20	Matisse invisible base 2200K - 20 cm	Polished brass	1,4	230	-
MAT322I30	Matisse invisible base 2200K - 30 cm	Polished brass	2,8	230	-
MAT322I40	Matisse invisible base 2200K - 40 cm	Polished brass	4,2	230	-
MAT322I60	Matisse invisible base 2200K - 60 cm	Polished brass	7	230	-
MAT327I20	Matisse invisible base 2700K - 20 cm	Polished brass	1,4	230	-
MAT327I30	Matisse invisible base 2700K - 30 cm	Polished brass	2,8	230	-
MAT327I40	Matisse invisible base 2700K - 40 cm	Polished brass	4,2	230	-
MAT327I60	Matisse invisible base 2700K - 60 cm	Polished brass	7	230	-

Contact us for:

Customisation, connectivity or halogen version of the collection

Customise your product with the connection system, see accessories.
Available in 2200K and 2700K.
Switch between 2200K and 2500K can be integrated on request.

IP 20

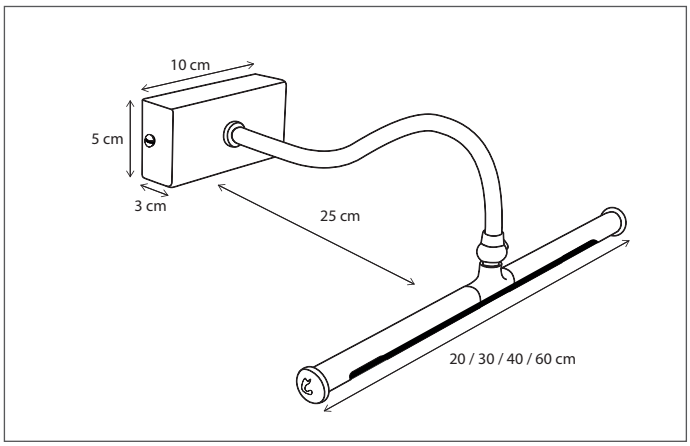

CODE	TYPE	FINISH	WATT	VOLT	FITTING
MAT022R20	Matisse rectangular base 2200K - 20 cm	Bronze	1,4	230	-
MAT022R30	Matisse rectangular base 2200K - 30 cm	Bronze	2,8	230	-
MAT022R40	Matisse rectangular base 2200K - 40 cm	Bronze	4,2	230	-
MAT022R60	Matisse rectangular base 2200K - 60 cm	Bronze	7	230	-
MAT027R20	Matisse rectangular base 2700K - 20 cm	Bronze	1,4	230	-
MAT027R30	Matisse rectangular base 2700K - 30 cm	Bronze	2,8	230	-
MAT027R40	Matisse rectangular base 2700K - 40 cm	Bronze	4,2	230	-
MAT027R60	Matisse rectangular base 2700K - 60 cm	Bronze	7	230	-
MAT122R20	Matisse rectangular base 2200K - 20 cm	Brushed nickel	1,4	230	-
MAT122R30	Matisse rectangular base 2200K - 30 cm	Brushed nickel	2,8	230	-
MAT122R40	Matisse rectangular base 2200K - 40 cm	Brushed nickel	4,2	230	-
MAT122R60	Matisse rectangular base 2200K - 60 cm	Brushed nickel	7	230	-
MAT127R20	Matisse rectangular base 2700K - 20 cm	Brushed nickel	1,4	230	-
MAT127R30	Matisse rectangular base 2700K - 30 cm	Brushed nickel	2,8	230	-
MAT127R40	Matisse rectangular base 2700K - 40 cm	Brushed nickel	4,2	230	-
MAT127R60	Matisse rectangular base 2700K - 60 cm	Brushed nickel	7	230	-
MAT222R20	Matisse rectangular base 2200K - 20 cm	Chrome	1,4	230	-
MAT222R30	Matisse rectangular base 2200K - 30 cm	Chrome	2,8	230	-
MAT222R40	Matisse rectangular base 2200K - 40 cm	Chrome	4,2	230	-
MAT222R60	Matisse rectangular base 2200K - 60 cm	Chrome	7	230	-
MAT227R20	Matisse rectangular base 2700K - 20 cm	Chrome	1,4	230	-

Contact us for:

Customisation, connectivity or halogen version of the collection

CODE	TYPE	FINISH	WATT	VOLT	FITTING
MAT227R30	Matisse rectangular base 2700K - 30 cm	Chrome	2,8	230	-
MAT227R40	Matisse rectangular base 2700K - 40 cm	Chrome	4,2	230	-
MAT227R60	Matisse rectangular base 2700K - 60 cm	Chrome	7	230	-
MAT322R20	Matisse rectangular base 2200K - 20 cm	Polished brass	1,4	230	-
MAT322R30	Matisse rectangular base 2200K - 30 cm	Polished brass	2,8	230	-
MAT322R40	Matisse rectangular base 2200K - 40 cm	Polished brass	4,2	230	-
MAT322R60	Matisse rectangular base 2200K - 60 cm	Polished brass	7	230	-
MAT327R20	Matisse rectangular base 2700K - 20 cm	Polished brass	1,4	230	-
MAT327R30	Matisse rectangular base 2700K - 30 cm	Polished brass	2,8	230	-
MAT327R40	Matisse rectangular base 2700K - 40 cm	Polished brass	4,2	230	-
MAT327R60	Matisse rectangular base 2700K - 60 cm	Polished brass	7	230	-

Contact us for:

Customisation, connectivity or halogen version of the collection

Customise your product with the connection system, see accessories.
Available in 2200K and 2700K.
Switch between 2200K and 2500K can be integrated on request.

IP 20

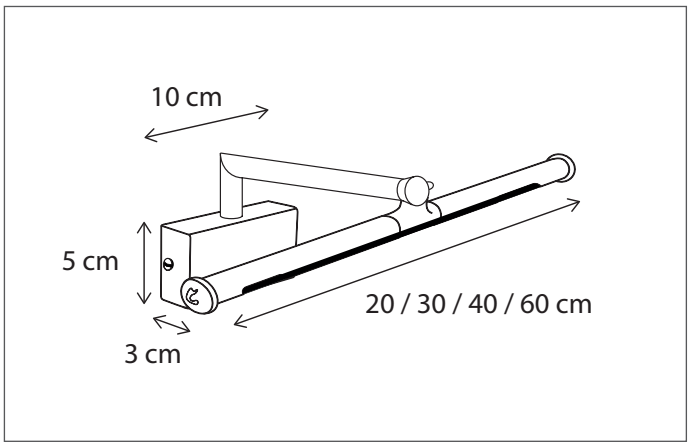

CODE	TYPE	FINISH	WATT	VOLT	FITTING
MAT022L20	Matisse 90° rectangular base 2200K - 20 cm	Bronze	1,4	230	-
MAT022L30	Matisse 90° rectangular base 2200K - 30 cm	Bronze	2,8	230	-
MAT022L40	Matisse 90° rectangular base 2200K - 40 cm	Bronze	4,2	230	-
MAT022L60	Matisse 90° rectangular base 2200K - 60 cm	Bronze	7	230	-
MAT027L20	Matisse 90° rectangular base 2700K - 20 cm	Bronze	1,4	230	-
MAT027L30	Matisse 90° rectangular base 2700K - 30 cm	Bronze	2,8	230	-
MAT027L40	Matisse 90° rectangular base 2700K - 40 cm	Bronze	4,2	230	-
MAT027L60	Matisse 90° rectangular base 2700K - 60 cm	Bronze	7	230	-
MAT122L20	Matisse 90° rectangular base 2200K - 20 cm	Brushed nickel	1,4	230	-
MAT122L30	Matisse 90° rectangular base 2200K - 30 cm	Brushed nickel	2,8	230	-
MAT122L40	Matisse 90° rectangular base 2200K - 40 cm	Brushed nickel	4,2	230	-
MAT122L60	Matisse 90° rectangular base 2200K - 60 cm	Brushed nickel	7	230	-
MAT127L20	Matisse 90° rectangular base 2700K - 20 cm	Brushed nickel	1,4	230	-
MAT127L30	Matisse 90° rectangular base 2700K - 30 cm	Brushed nickel	2,8	230	-
MAT127L40	Matisse 90° rectangular base 2700K - 40 cm	Brushed nickel	4,2	230	-
MAT127L60	Matisse 90° rectangular base 2700K - 60 cm	Brushed nickel	7	230	-
MAT222L20	Matisse 90° rectangular base 2200K - 20 cm	Chrome	1,4	230	-
MAT222L30	Matisse 90° rectangular base 2200K - 30 cm	Chrome	2,8	230	-
MAT222L40	Matisse 90° rectangular base 2200K - 40 cm	Chrome	4,2	230	-
MAT222L60	Matisse 90° rectangular base 2200K - 60 cm	Chrome	7	230	-
MAT227L20	Matisse 90° rectangular base 2700K - 20 cm	Chrome	1,4	230	-

Contact us for:

Customisation, connectivity or halogen version of the collection

CODE	TYPE	FINISH	WATT	VOLT	FITTING
MAT227L30	Matisse 90° rectangular base 2700K - 30 cm	Chrome	2,8	230	-
MAT227L40	Matisse 90° rectangular base 2700K - 40 cm	Chrome	4,2	230	-
MAT227L60	Matisse 90° rectangular base 2700K - 60 cm	Chrome	7	230	-
MAT322L20	Matisse 90° rectangular base 2200K - 20 cm	Polished brass	1,4	230	-
MAT322L30	Matisse 90° rectangular base 2200K - 30 cm	Polished brass	2,8	230	-
MAT322L40	Matisse 90° rectangular base 2200K - 40 cm	Polished brass	4,2	230	-
MAT322L60	Matisse 90° rectangular base 2200K - 60 cm	Polished brass	7	230	-
MAT327L20	Matisse 90° rectangular base 2700K - 20 cm	Polished brass	1,4	230	-
MAT327L30	Matisse 90° rectangular base 2700K - 30 cm	Polished brass	2,8	230	-
MAT327L40	Matisse 90° rectangular base 2700K - 40 cm	Polished brass	4,2	230	-
MAT327L60	Matisse 90° rectangular base 2700K - 60 cm	Polished brass	7	230	-

Contact us for:

Customisation, connectivity or halogen version of the collection

Select the correct driver, see accessories.
Available in 2200K and 2700K.
Switch between 2200K and 2500K can be integrated on request.

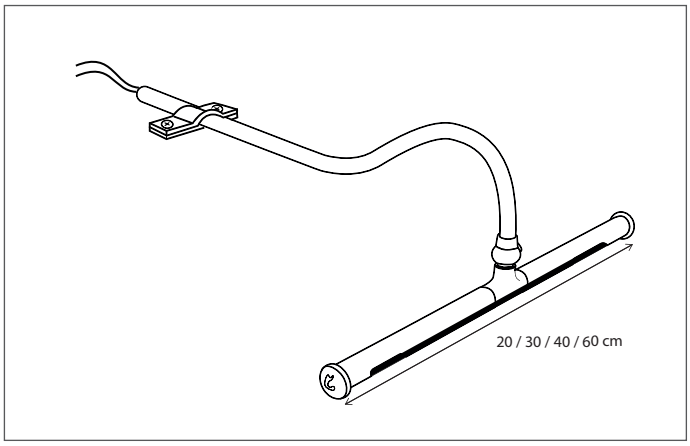

CODE	TYPE	FINISH	WATT	VOLT	FITTING
MAT022C20	Matisse cabinet mounted 2200K - 20 cm	Bronze	1,4	24	-
MAT022C30	Matisse cabinet mounted 2200K - 30 cm	Bronze	2,8	24	-
MAT022C40	Matisse cabinet mounted 2200K - 40 cm	Bronze	4,2	24	-
MAT022C60	Matisse cabinet mounted 2200K - 60 cm	Bronze	7	24	-
MAT027C20	Matisse cabinet mounted 2700K - 20 cm	Bronze	1,4	24	-
MAT027C30	Matisse cabinet mounted 2700K - 30 cm	Bronze	2,8	24	-
MAT027C40	Matisse cabinet mounted 2700K - 40 cm	Bronze	4,2	24	-
MAT027C60	Matisse cabinet mounted 2700K - 60 cm	Bronze	7	24	-
MAT122C20	Matisse cabinet mounted 2200K - 20 cm	Brushed nickel	1,4	24	-
MAT122C30	Matisse cabinet mounted 2200K - 30 cm	Brushed nickel	2,8	24	-
MAT122C40	Matisse cabinet mounted 2200K - 40 cm	Brushed nickel	4,2	24	-
MAT122C60	Matisse cabinet mounted 2200K - 60 cm	Brushed nickel	7	24	-
MAT127C20	Matisse cabinet mounted 2700K - 20 cm	Brushed nickel	1,4	24	-
MAT127C30	Matisse cabinet mounted 2700K - 30 cm	Brushed nickel	2,8	24	-
MAT127C40	Matisse cabinet mounted 2700K - 40 cm	Brushed nickel	4,2	24	-
MAT127C60	Matisse cabinet mounted 2700K - 60 cm	Brushed nickel	7	24	-
MAT222C20	Matisse cabinet mounted 2200K - 20 cm	Chrome	1,4	24	-
MAT222C30	Matisse cabinet mounted 2200K - 30 cm	Chrome	2,8	24	-
MAT222C40	Matisse cabinet mounted 2200K - 40 cm	Chrome	4,2	24	-
MAT222C60	Matisse cabinet mounted 2200K - 60 cm	Chrome	7	24	-
MAT227C20	Matisse cabinet mounted 2700K - 20 cm	Chrome	1,4	24	-

Contact us for:

Customisation, connectivity or halogen version of the collection

CODE	TYPE	FINISH	WATT	VOLT	FITTING
MAT227C30	Matisse cabinet mounted 2700K - 30 cm	Chrome	2,8	24	-
MAT227C40	Matisse cabinet mounted 2700K - 40 cm	Chrome	4,2	24	-
MAT227C60	Matisse cabinet mounted 2700K - 60 cm	Chrome	7	24	-
MAT322C20	Matisse cabinet mounted 2200K - 20 cm	Polished brass	1,4	24	-
MAT322C30	Matisse cabinet mounted 2200K - 30 cm	Polished brass	2,8	24	-
MAT322C40	Matisse cabinet mounted 2200K - 40 cm	Polished brass	4,2	24	-
MAT322C60	Matisse cabinet mounted 2200K - 60 cm	Polished brass	7	24	-
MAT327C20	Matisse cabinet mounted 2700K - 20 cm	Polished brass	1,4	24	-
MAT327C30	Matisse cabinet mounted 2700K - 30 cm	Polished brass	2,8	24	-
MAT327C40	Matisse cabinet mounted 2700K - 40 cm	Polished brass	4,2	24	-
MAT327C60	Matisse cabinet mounted 2700K - 60 cm	Polished brass	7	24	-

Contact us for:

Customisation, connectivity or halogen version of the collection